Transforming tomorrow.

INDUSTRIAL CONTROL TRANSFORMER

VA: 75

PRIMARY VOLTAGE: 380/400/415

SECONDARY VOLTAGE: 110/220

SNC's Industrial Control Transformers are specially designed to accommodate the momentary current inrush caused when electromagnetic components are energized. These transformers deliver excellent secondary voltage requirements and meet or exceed the standards established by UL and cUL. Their rugged construction and excellent electrical characteristics ensure reliable operation of electromagnetic devices and trouble-free performance.

PRODUCT FEATURES

- Enclosed coils completely enclose the transformer coils against moisture, dirt, dust and industrial contaminants for maximum protection in industrial environments.
- Finger-safe terminals integrally built in. Up to 30% greater terminal contact area permits low-loss connections. Extra deep barriers reduce the chance of shorts from frayed leads or careless wiring.
- Terminals are molded into the transformer for a robust, compact design. A full quarter inch of thread on the 8-32 terminal screws prevents stripping and pullout.
- Mounting plate is heavy gauge steel to add strength to core construction and provide stability. Slotted mounting feet permit easy and flexible installation.
- Attractive black matte finish, easy-to-read label with complete wiring diagram.
- Two parallel jumper links come standard with all transformers which can be wired for dual primary voltages.

VOLTAGE TABLE

VA	Primary Voltage	Secondary Voltage	Part Number
75	380/400/415	110/220	P24445
Max Depth	**Max Width**	**Max Height**	**Mounting Depth**
3.82"	3"	2.7897"	2.5"
Mounting Width	**Mounting Hole Depth**	**Mounting Hole Width**	**Phase**
2.5"	0.203"	0.406"	1
Frequency	**Shipping Weight**	**Voltage Group**	
50/60 Hz	3.5 lbs.	I	

DIAGRAM

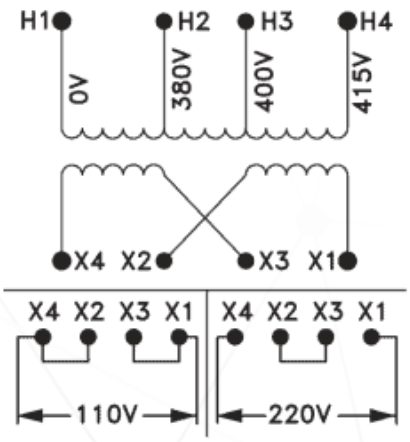

APPLICATIONS

- Contractors
- Motor Starters
- Robotics
- Control Panels
- Relays
- Solenoids

SPECIFICATIONS

- Class 130°C (226°F) insulation system with 55°C (131°F) temperature rise
- Constructed with high quality silicon steel laminates to minimize core losses and increase performance and efficiency.
- Copper magnet wire of the highest quality assures efficient operation.
- Primary and secondary fusing options available in kits or factory installed.
- UL, cUL listed, CSA certified. CE listing available upon request.

Learn more about how our custom solutions can transform tomorrow's products.